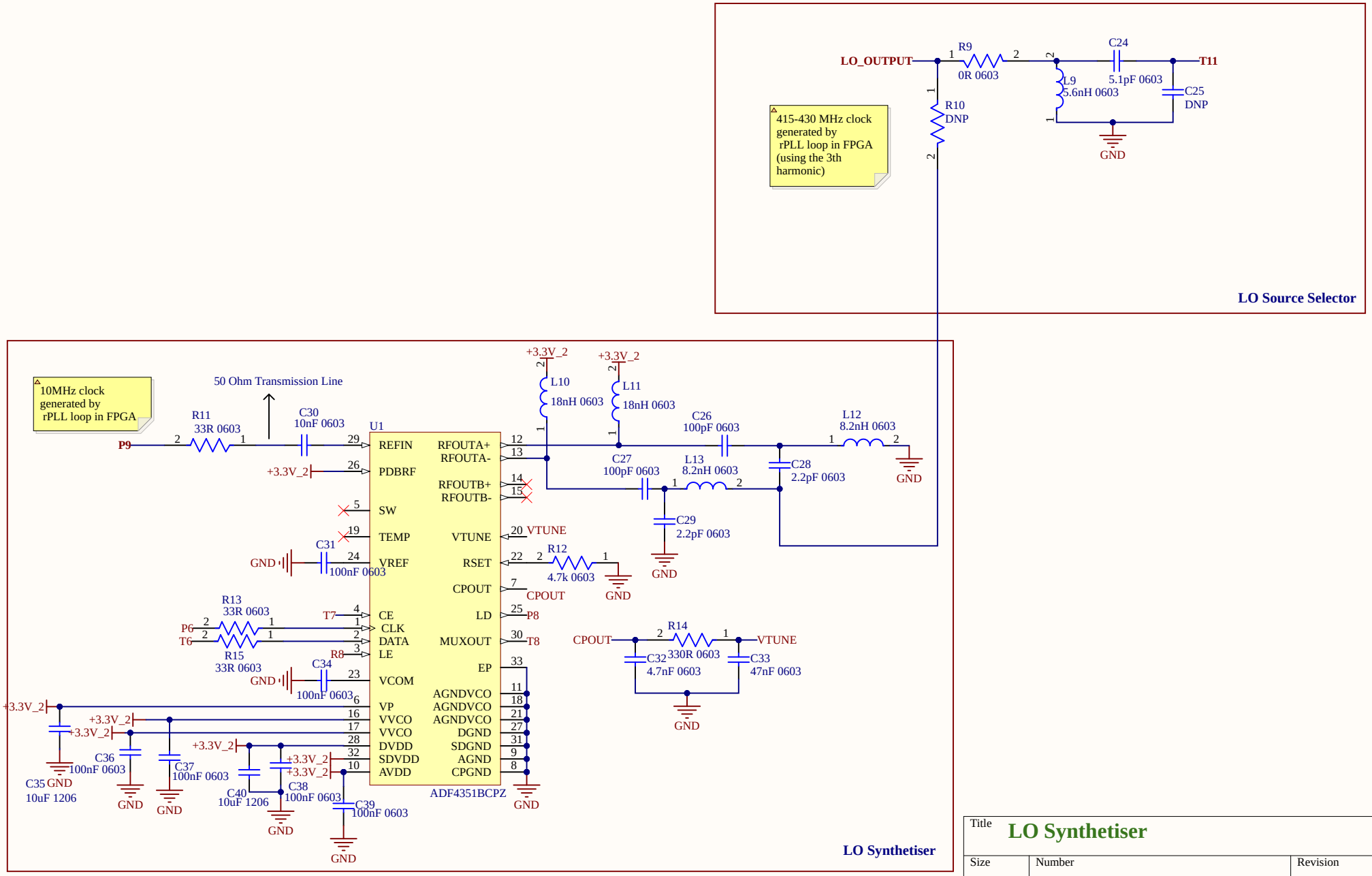

Title	**LO Synthetiser**	
Size A4	Number	Revision
Date: 3/31/2026		Sheet of
File: D:\Designs\..\LO_Synthetiser.SchDoc		Drawn By: Ebubekir Tasci

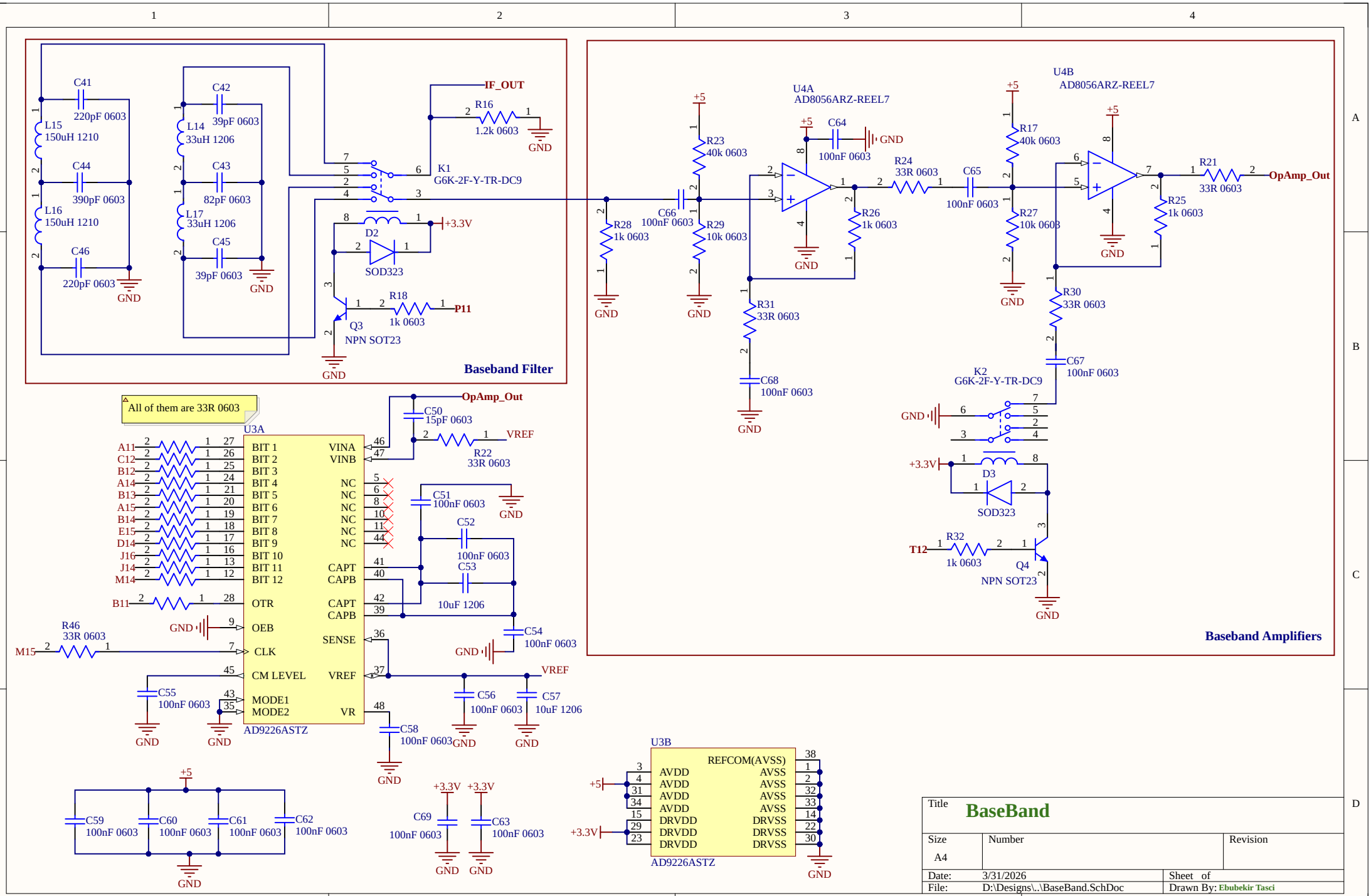
Baseband Filter
Baseband Amplifiers
All of them are 33R 0603
IF_OUT
OpAmp_Out
P11
T12
VREF
U3A
AD9226ASTZ
U3B
AD9226ASTZ
U4A
AD8056ARZ-REEL7
U4B
AD8056ARZ-REEL7
K1
G6K-2F-Y-TR-DC9
K2
G6K-2F-Y-TR-DC9
Q3
NPN SOT23
Q4
NPN SOT23
D2
SOD323
D3
SOD323
GND
+5
+3.3V
Title
BaseBand
Size
A4
Number
Revision
Date: 3/31/2026
Sheet of
File: D:\Designs\..\BaseBand.SchDoc
Drawn By: Ebubekir Tasci

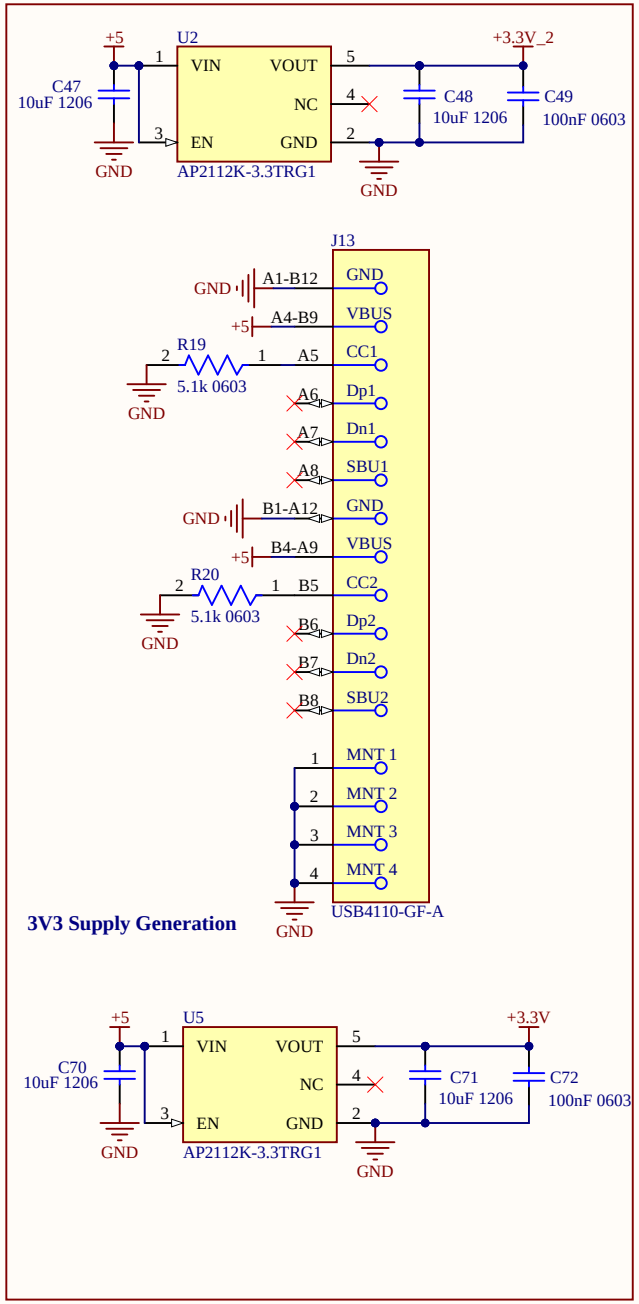

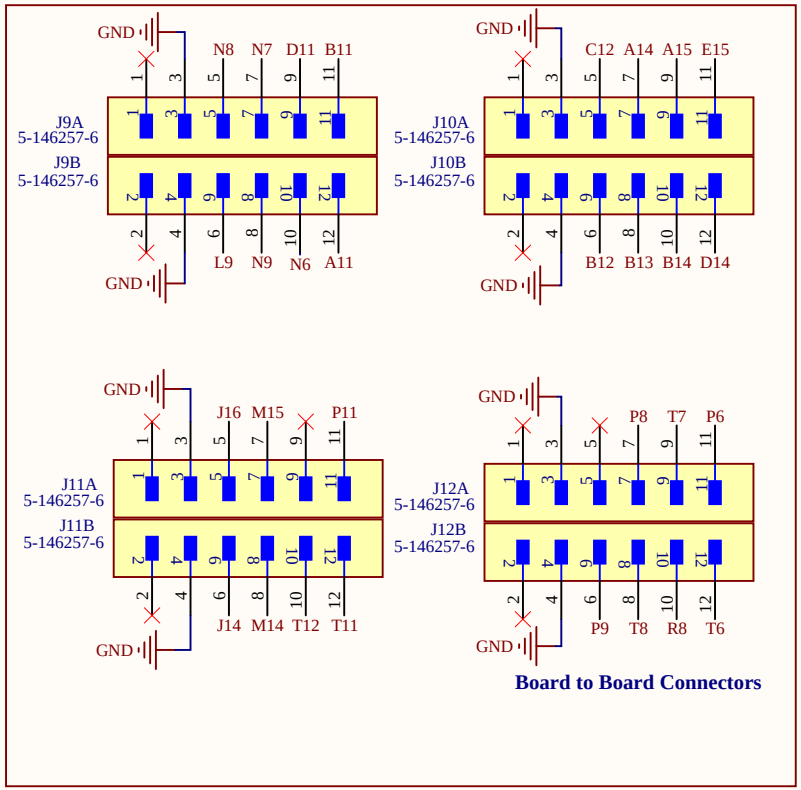

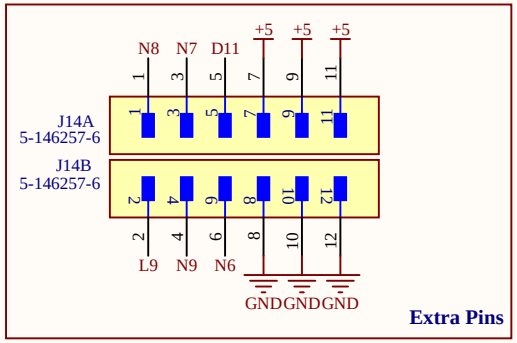

Title	I/O Headers and Power Management	
Size A4	Number	Revision
Date: 3/31/2026		Sheet of
File: D:\Designs\..\Headers_Power.SchDoc		Drawn By: Ebubekir Tasci

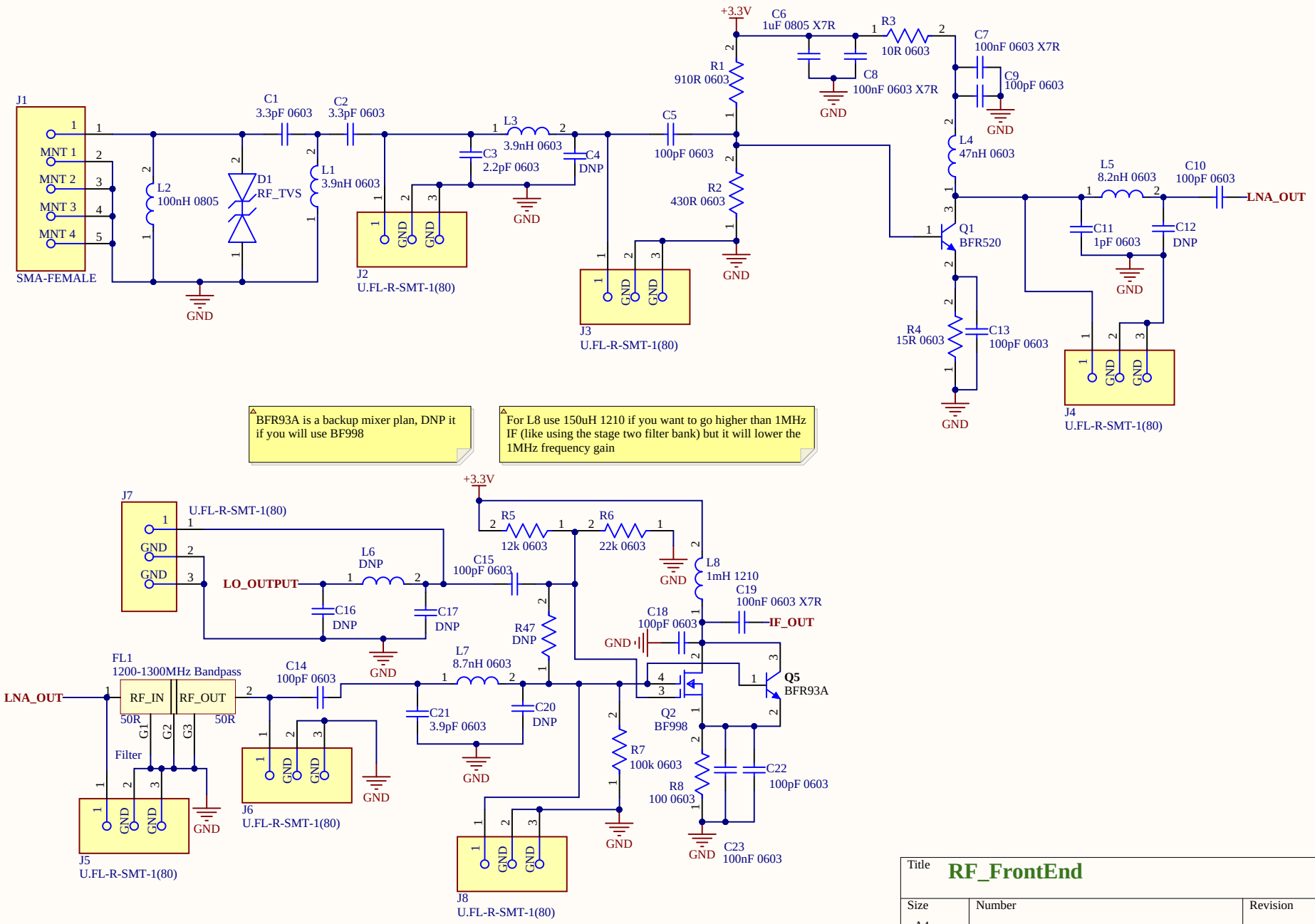

Title	**RF_FrontEnd**	
Size A4	Number	Revision
Date: 3/31/2026		Sheet of
File: D:\Designs\..\RF_FrontEnd.SchDoc		Drawn By: Ebubekir Tasci